NOTES:
1. GAS USE
2. ENVIROLASTIC 940 LV POLYASPARTIC COATING FOR HIGH PERFORMANCE FINISH (MEMCO GREY)
3. UL 2085 LABELED AND LISTED
4. 2 HOUR RATING TESTED TO SwRI 97-04 NFPA 30 A FIRE RESISTANT TANK
5. TIE-DOWN POINTS ON SADDLES
6. LEAD TIME IS DEPENDENT ON IMMEDIATE APPROVAL



CALCULATED WEIGHT:
18,250 LB±

FIREGUARD
TANK CAPACITY :5,000 GALLONS

This document and all information and design thereon are the property of Envirosafe Fuel Systems. This document is confidential and must not be made public or copies without written authorization from Envirosafe and is subject to return upon demand. No use of this document or any design thereon is permitted except as is specifically authorized in writing by Envirosafe. Acceptance of possession of this document constitutes full agreement with the above conditions. All Right Reserved. Memco, Inc.

#		
STI	SwRI	UL

IT IS THE CLIENT'S RESPONSIBILITY TO ENSURE SYSTEM COMPLIANCE WITH APPLICABLE REGULATIONS.
APPROVED BY:

MEMCO, INC

ER. VERSION #:
SALES ORDER #:

AUTHOR	AP
MEMCO REP	
DATE	7/5/2022
SIZE D	REV
SHEET 1 OF 4	

envirosafe™ ABOVE-GROUND FUEL SYSTEMS

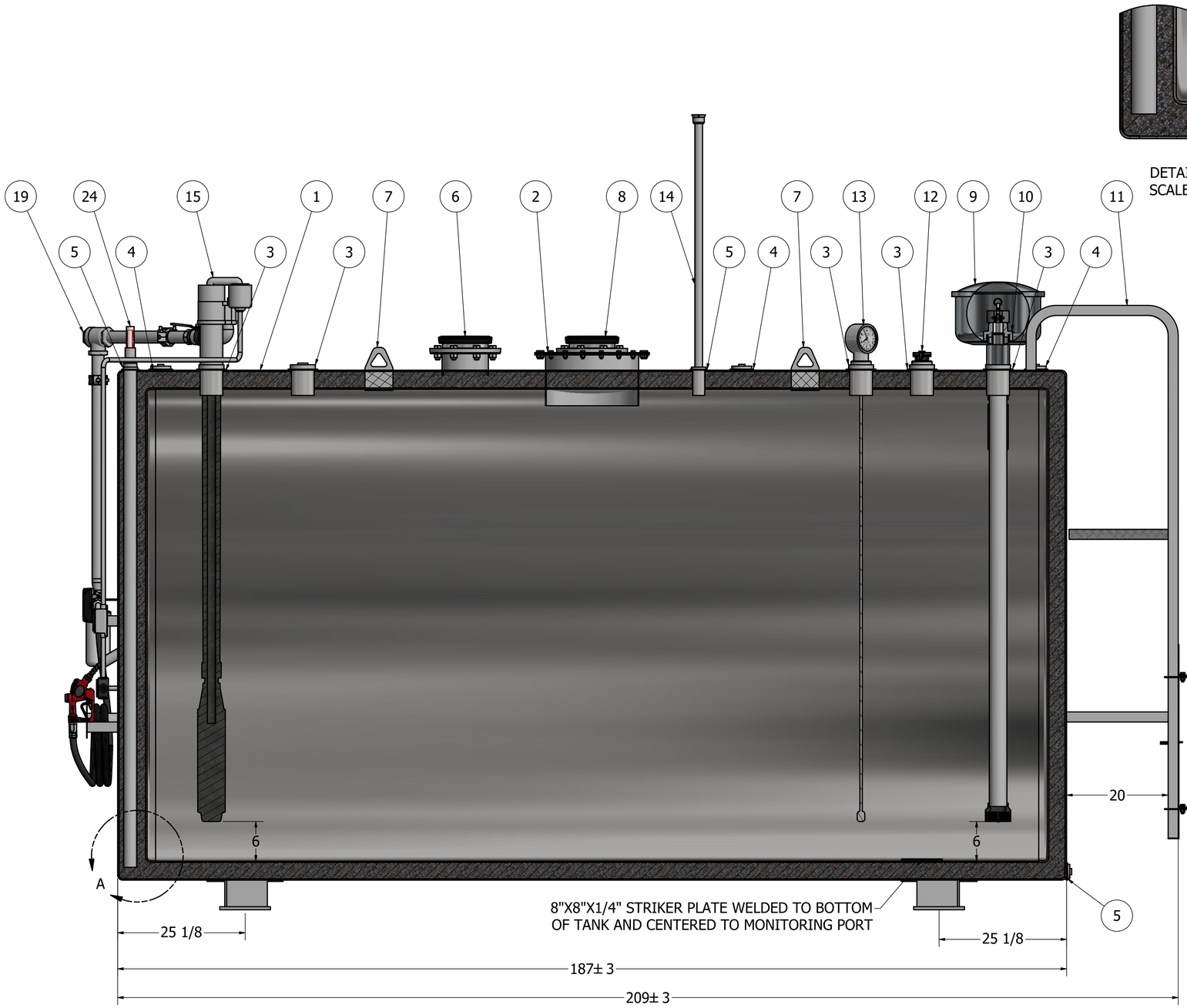

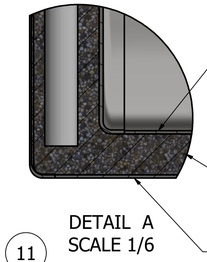

DETAIL A
SCALE 1/6

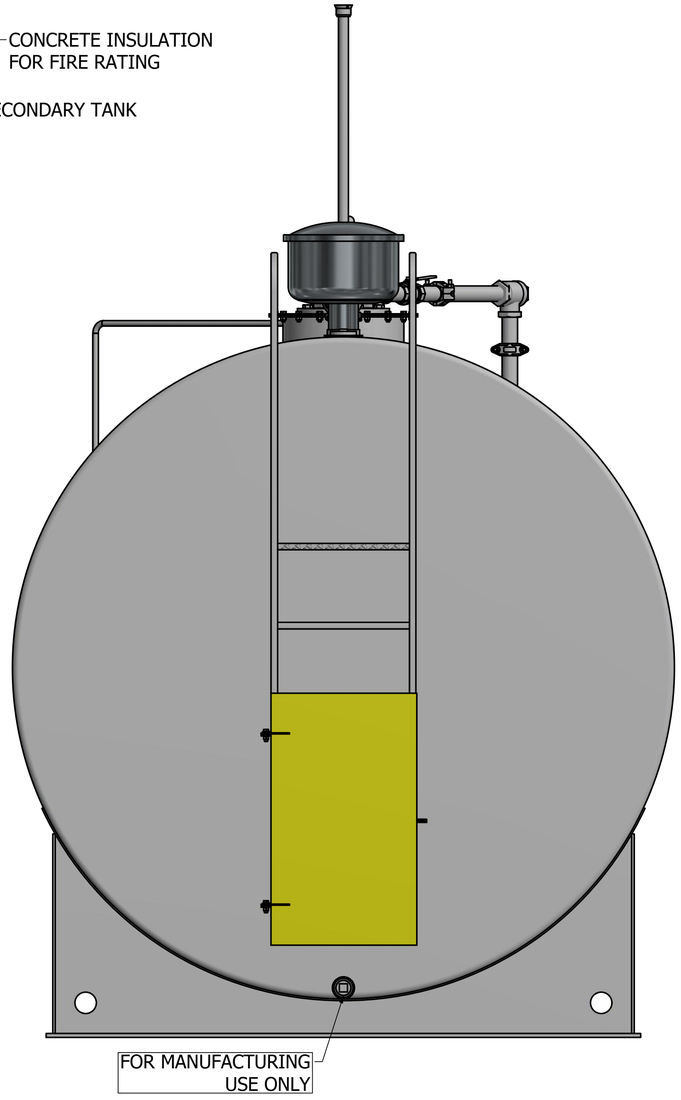

This document and all information and design thereon are the property of Envirosafe Fuel Systems. This document is confidential and must not be made public or copies without written authorization from Envirosafe and is subject to return upon demand. No use of this document or any design thereon is permitted except as is specifically authorized in writing by Envirosafe. Acceptance of possession of this document constitutes full agreement with the above conditions. All Right Reserved. Memco, Inc.

#

STI | SwRI | UL

IT IS THE CLIENT'S RESPONSIBILITY TO ENSURE SYSTEM COMPLIANCE WITH APPLICABLE REGULATIONS.

APPROVED BY:

MEMCO, INC

ER. VERSION #:

SALES ORDER #:

AUTHOR	AP
MEMCO REP	
DATE	7/5/2022
SIZE	D
REV	
SHEET	2 OF 4

envirosafe™
ABOVE-GROUND FUEL SYSTEMS

PARTS LIST		
ITEM	QTY	DESCRIPTION
1	1	5,000 GALLON FIREGUARD TANK MOUNTED ON SADDLES
2	1	18" MANWAY FOR EASY INNER TANK ACCESSIBILITY WITH 8" FLANGED E-VENT OPENING
3	5	4" NPT THREADED FLANGE
4	3	3" NPT THREADED FLANGE (CONCRETE PORT)
5	3	2" NPT THREADED FLANGE
6	1	8" 8 OZ./SQ.IN. FLANGED EMERGENCY VENT KIT
7	2	LIFTING LUG
8	1	8" 8 OZ./SQ.IN. FLANGED EMERGENCY VENT WITH SET OF NUTS AND BOLTS AND GASKET
9	1	7.5 GALLON OVERSPILL CONTAINER WITH LOCKABLE LID
10	1	2" OVERFILL PREVENTION VALVE W/3" MALE QUICK DISCONNECT X 4" FEMALE THREADS, DIFFUSER, TEST MECHANISM AND DUST CAP
11	1	STEP LADDER WITH PLATFORM AND SAFETY SHIELD
12	1	MONITORING CAP 2"
13	1	818-CLOCK-GAUGE WITH STANDARD FLOAT
14	1	STACK VENT WITH VENT, UPDRAFT 2"
15	1	1/3 HP FIXED SPEED STP W/ RISER 86"-147"
16	1	CIM-TEK 1 1/2" FILTER ADAPTER, 1" SPIN-ON FILTER
17	1	METER 6 TO 40 GPM, 1-1/2" INPUT/OUTPUT, 4 DIGIT REGISTER
18	1	VALVE BALL BRASS 1-1/2"
19	1	2" NPT ANTI-SIPHON VALVE 5'-10' W.C.
20	1	VALVE BALL FULL FLOW BRASS 2"
21	1	NOZZLE GAS 3/4" WITH 3/4"X18' HOSE PUMPFLEX II W/MXM FITTINGS, HOSE WHIP 3/4"X12" MXM FITTINGS
22	1	COVER SWITH TUMBLER WITH DEVICE HUBBELL XS-2C, 2-POLE, 20A WITH SWITCH BOX 1/2" FEED THROUGH
23	1	1/2" JUNCTION BOX
24	1	INTERSTITIAL LEAK GAUGE
25	1	TANK DECAL KIT (NOT SHOWN)
26	1	1-1/2" REPLACEMENT FILTERS (NOT SHOWN AND SHIPPED SEPARATELY)
27	1	TOUCH UP PAINT (NOT SHOWN AND SHIPPED SEPARATELY)

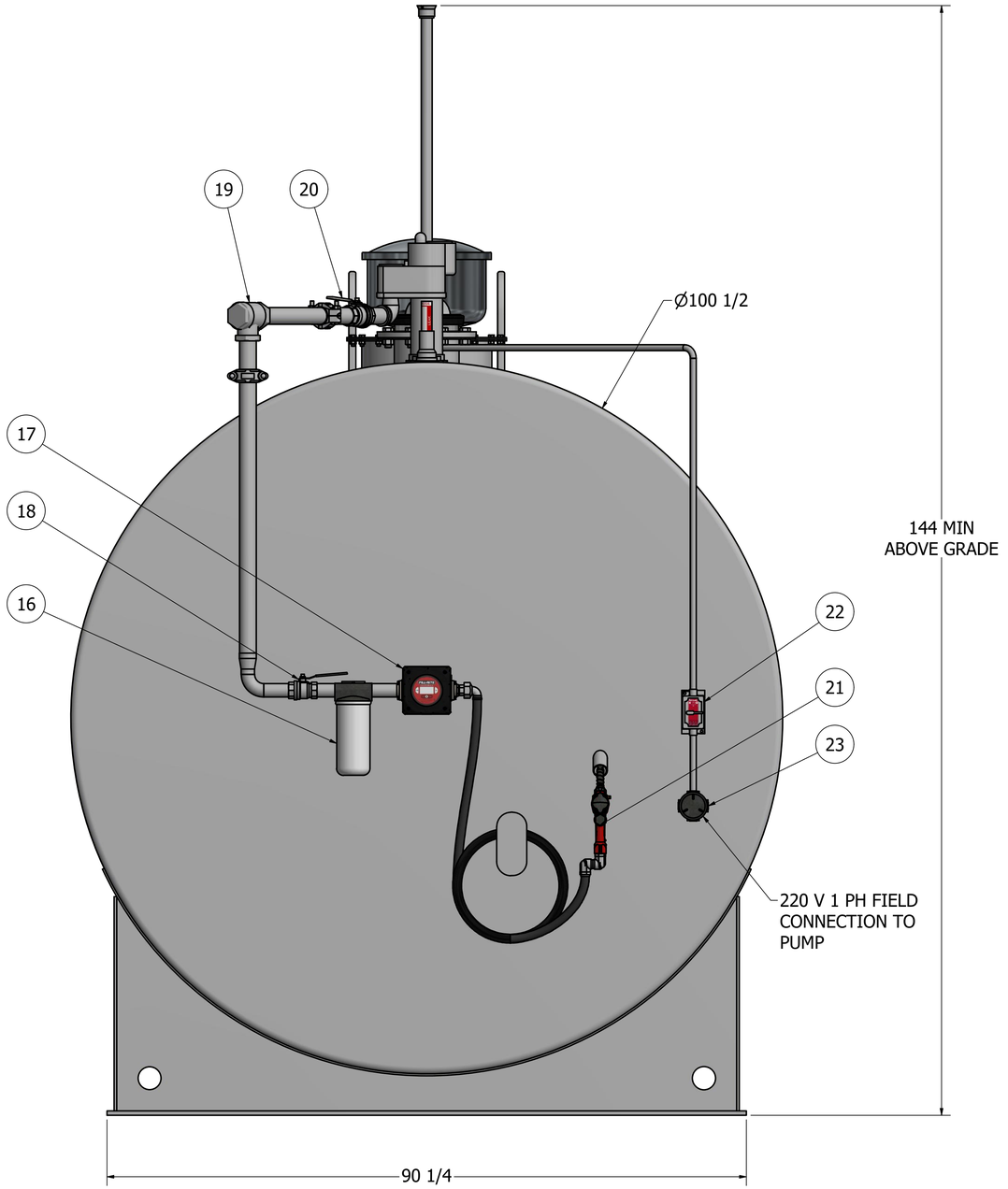

SHELL THICKNESS: 1/4"
HEAD THICKNESS: 5/16"

This document and all information and design thereon are the property of Envirosafe Fuel Systems. This document is confidential and must not be made public or copies without written authorization from Envirosafe and is subject to return upon demand. No use of this document or any design thereon is permitted except as is specifically authorized in writing by Envirosafe. Acceptance of possession of this document constitutes full agreement with the above conditions. All Right Reserved. Memco, Inc.

#

STI | SwRI | UL

IT IS THE CLIENT'S RESPONSIBILITY TO ENSURE SYSTEM COMPLIANCE WITH APPLICABLE REGULATIONS.

APPROVED BY:

MEMCO, INC

ER. VERSION #:

SALES ORDER #:

AUTHOR	AP
MEMCO REP	
DATE	7/5/2022
SIZE	D
REV	
SHEET	3 OF 4

envirosafe™
ABOVE-GROUND FUEL SYSTEMS

PARTS LIST			
ITEM	QTY	DESCRIPTION	PART NUMBER
1	1	5,000 GALLON FIREGUARD TANK MOUNTED ON SADDLES	5000 FG TANK ASSEMBLY_NEW LENGTH
2	1	18" MANWAY FOR EASY INNER TANK ACCESSIBILITY WITH 8" FLANGED E-VENT OPENING	P-18X8 MANWAY COVER, P-18 MANWAY 10 NECK
3	5	4" NPT THREADED FLANGE	P-SERIES 262
4	3	3" NPT THREADED FLANGE (CONCRETE PORT)	P-SERIES 260
5	3	2" NPT THREADED FLANGE	P-SERIES 258
6	1	8" 8 OZ./SQ.IN. FLANGED EMERGENCY VENT KIT	P-244OF-08080 AK
7	2	LIFTING LUG	P-2-899MLL
8	1	8" 8 OZ./SQ.IN. FLANGED EMERGENCY VENT WITH SET OF NUTS AND BOLTS AND GASKET	P-244OF-0100AVEVR, P-244F-0110 2G, P-244F-0107 AN
9	1	7.5 GALLON OVERSPILL CONTAINER WITH LOCKABLE LID	P-AL7.5-P4/6D
10	1	2" OVERFILL PREVENTION VALVE W/3" MALE QUICK DISCONNECT X 4" FEMALE THREADS, DIFFUSER, TEST MECHANISM AND DUST CAP	P-9095AA-4000AV, P-9095ATM1000 AK, P-539AT-0200 AD, P-800DC-A06001C
11	1	STEP LADDER WITH PLATFORM AND SAFETY SHIELD	5K-12K FG STEP LADDER WITH PLATFORM AND SAFETY SHIELD
12	1	MONITORING CAP 2"	P-179M-0100AC
13	1	818-CLOCK-GAUGE WITH STANDARD FLOAT	P-818-0100AG
14	1	STACK VENT WITH VENT, UPDRAFT 2"	P-354-0200AV
15	1	1/3 HP FIXED SPEED STP W/ RISER 86"-147"	P-STP33-VL2-04
16	1	CIM-TEK 1 1/2" FILTER ADAPTER, 1" SPIN-ON FILTER	P-50163, P-70020
17	1	METER 6 TO 40 GPM, 1-1/2" INPUT/OUTPUT, 4 DIGIT REGISTER	P-900CD1.5
18	1	VALVE BALL BRASS 1-1/2"	P-0740-30280
19	1	2" NPT ANTI-SIPHON VALVE 5'-10' W.C.	P-910-2100 AV
20	1	VALVE BALL FULL FLOW BRASS 2"	P-0740-30282
21	1	NOZZLE GAS 3/4" WITH 3/4"X18' HOSE PUMPFLEX II W/MXM FITTINGS, HOSE WHIP 3/4"X12" MXM FITTINGS	P-696172-03
22	1	COVER SWITH TUMBLER WITH DEVICE HUBBELL XS-2C, 2-POLE, 20A WITH SWITCH BOX 1/2" FEED THROUGH	P-XS-2C, P- SWB-4
23	1	1/2" JUNCTION BOX	P-GUR-1
24	1	INTERSTITIAL LEAK GAUGE	P-K-2-96
25	1	TANK DECAL KIT (NOT SHOWN)	P-TANK DECAL KIT
26	1	1-1/2" REPLACEMENT FILTERS (NOT SHOWN AND SHIPPED SEPARATELY)	P-70020(EF21001)
27	1	TOUCH UP PAINT (NOT SHOWN AND SHIPPED SEPARATELY)	

This document and all information and design thereon are the property of Envirosafe Fuel Systems. This document is confidential and must not be made public or copies without written authorization from Envirosafe and is subject to return upon demand. No use of this document or any design thereon is permitted except as is specifically authorized in writing by Envirosafe. Acceptance of possession of this document constitutes full agreement with the above conditions. All Right Reserved. Memco, Inc.

#

STI | SwRI | UL

IT IS THE CLIENT'S RESPONSIBILITY TO ENSURE SYSTEM COMPLIANCE WITH APPLICABLE REGULATIONS.

APPROVED BY:

MEMCO, INC

ER. VERSION #:

SALES ORDER #:

AUTHOR	AP
MEMCO REP	
DATE	7/5/2022
SIZE	D
REV	
SHEET	4 OF 4

envirosafe™ ABOVE-GROUND FUEL SYSTEMS